SP-960 OPEN DIMENSIONAL OVERVIEW

TOP VIEW

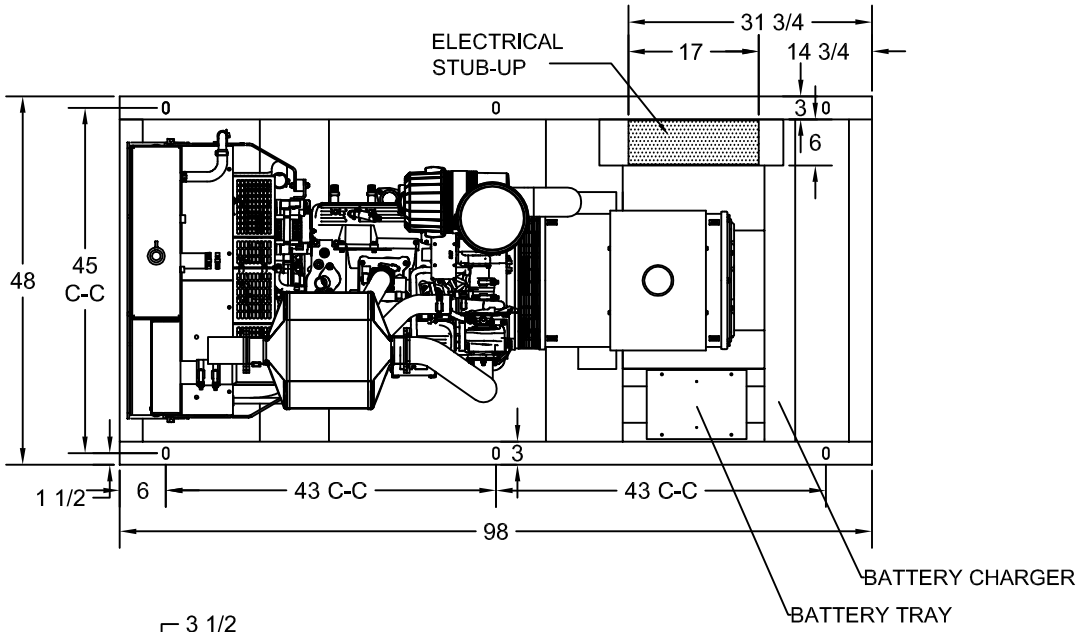

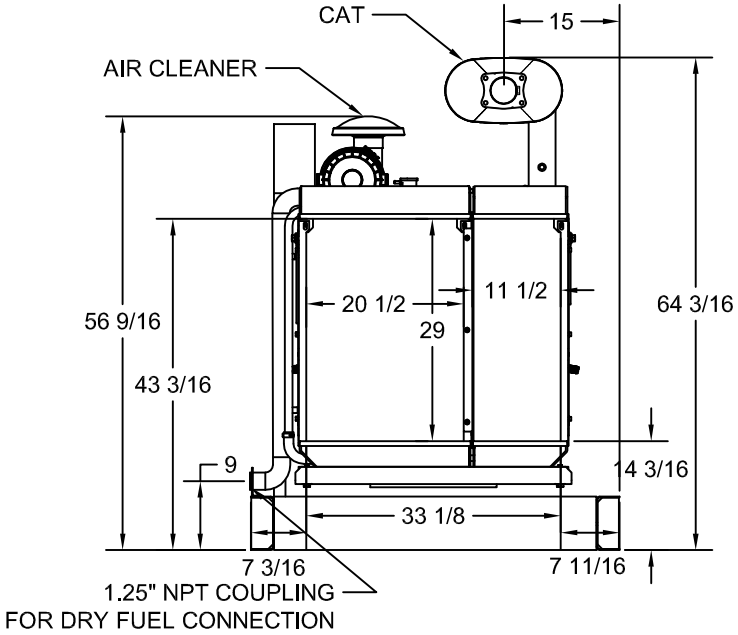

RADIATOR VIEW

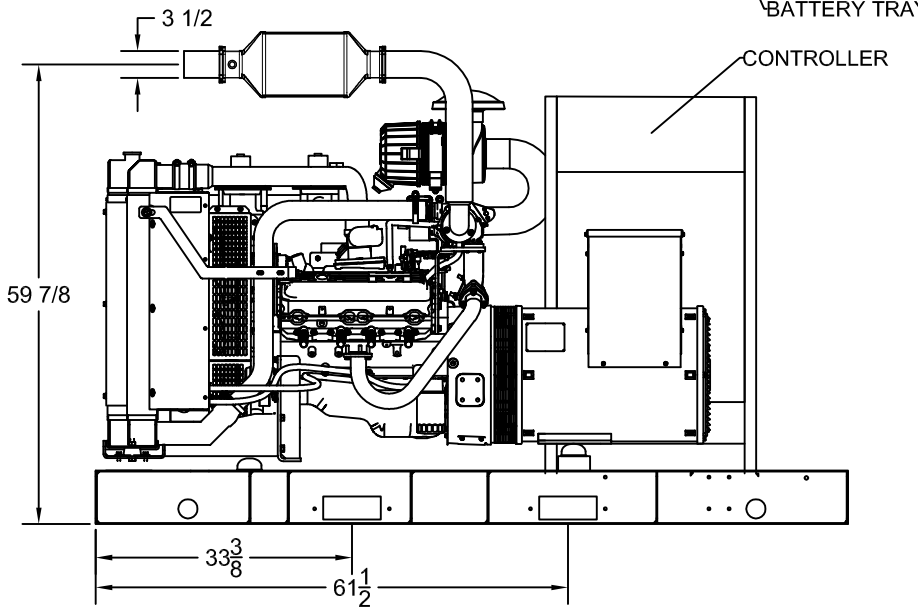

SIDE VIEW