OUTLINE DIMENSIONS FOR 20 THRU 30 KW LEVEL 3 ENCLOSURE

(HINGED DOORS & HOSPITAL GRADE SILENCER)

TOP VIEW

(GEN-SET HAS (4) DOORS, (2) SHOWN OPEN ARE TYPICAL FOR BOTH SIDES)

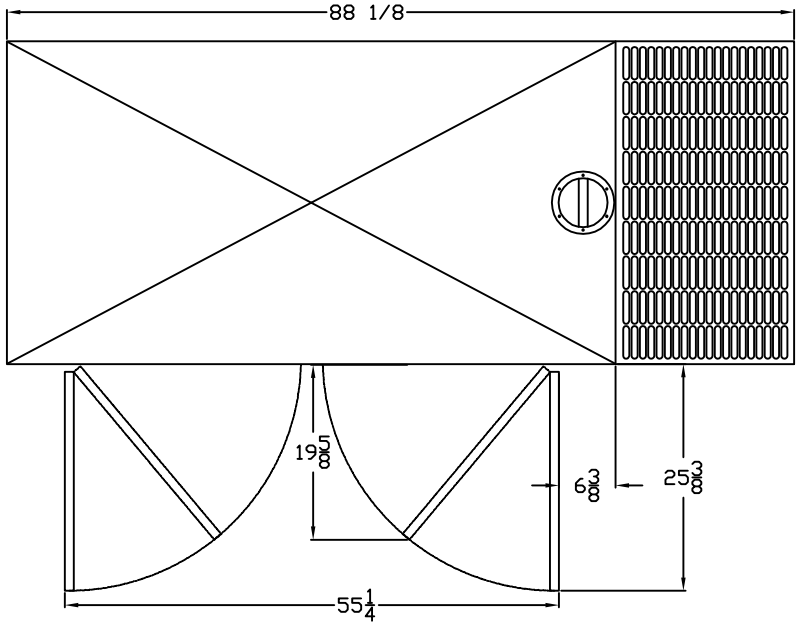

FRAME VIEW

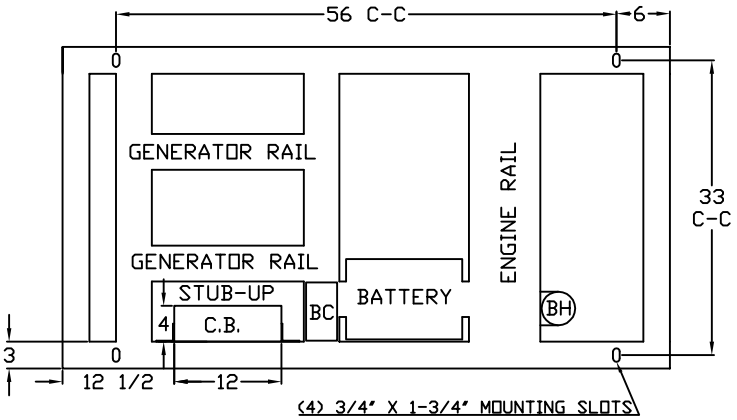

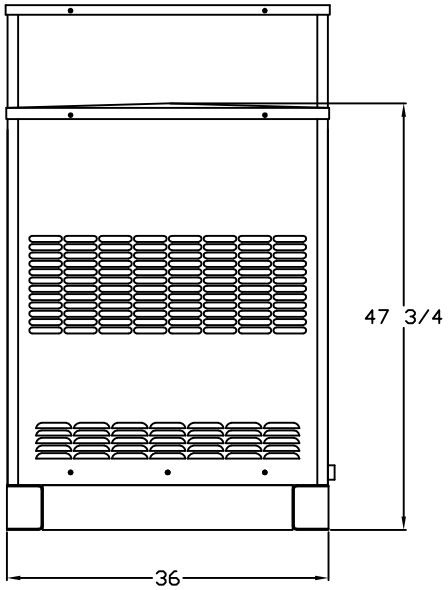

GENERATOR END VIEW

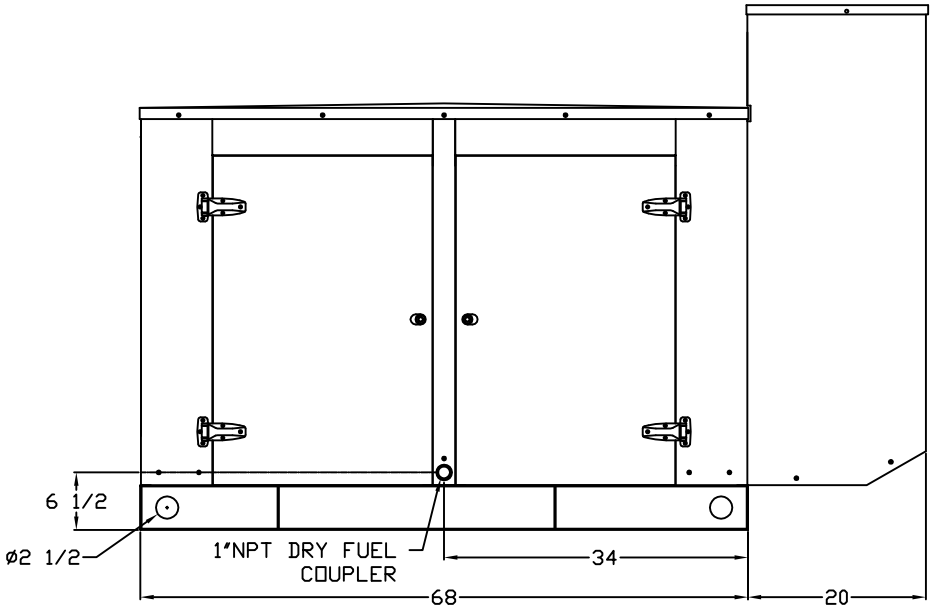

SIDE VIEW

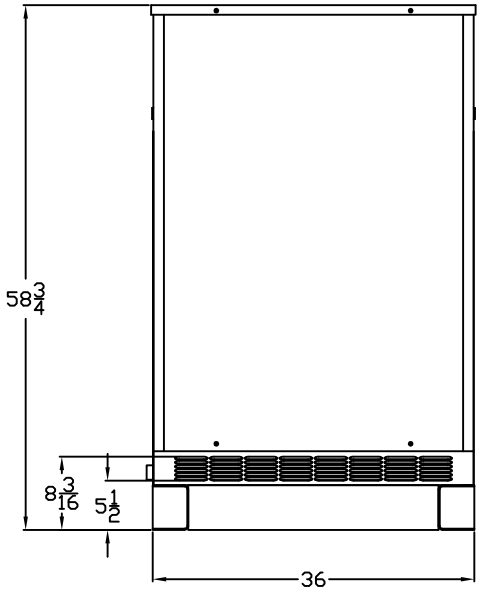

RADIATOR END VIEW

SP-SPJD-200-300-L3-GENERATOR-SET-HINGES-HOSPITAL-GRADE-SILENCER-OVERIVEW-20170410