OUTLINE DIMENSIONS FOR 41 THRU 62 KW LEVEL 2 ENCLOSURE
(HINGED DOORS)

TOP VIEW

(GEN-SET HAS (4) DOORS, (2) SHOWN OPEN ARE TYPICAL FOR BOTH SIDES)

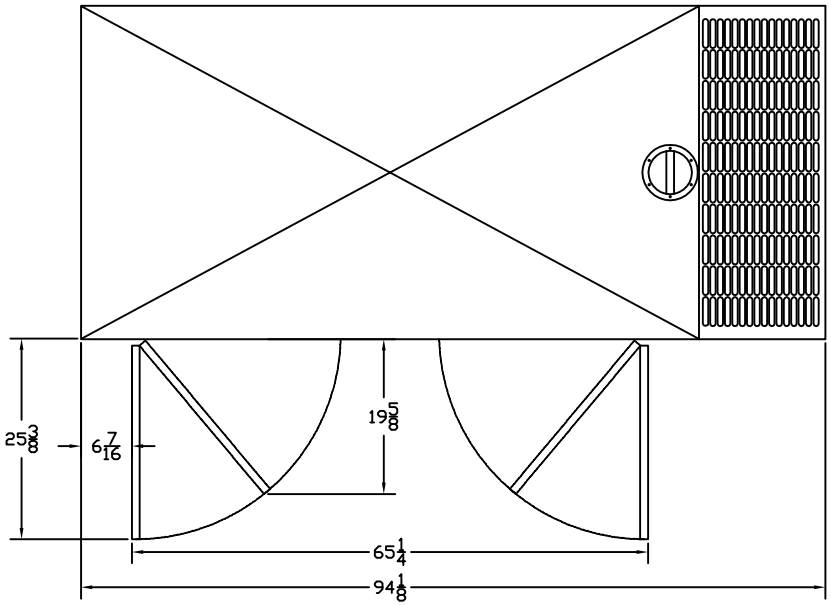

FRAME VIEW

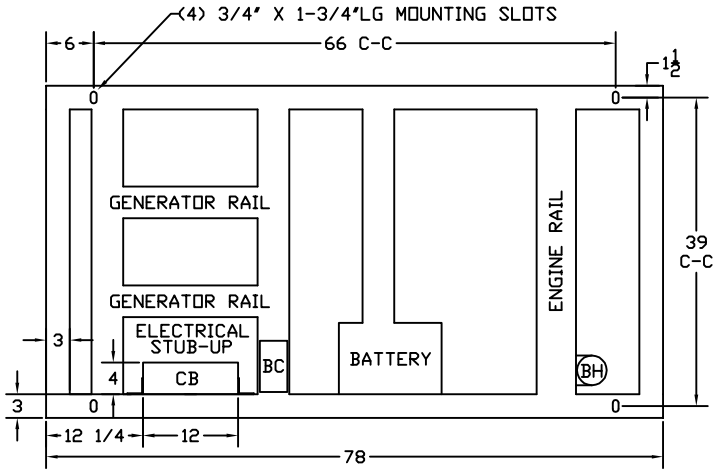

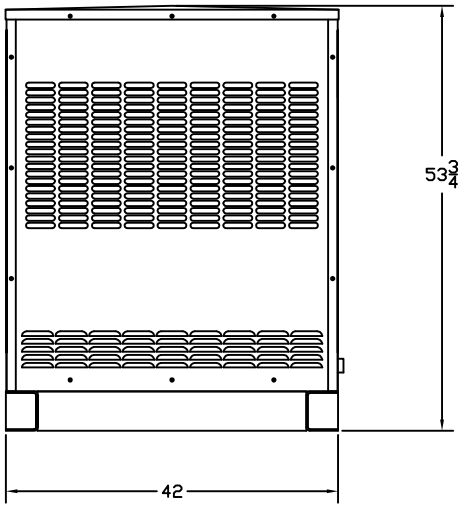

GENERATOR END VIEW

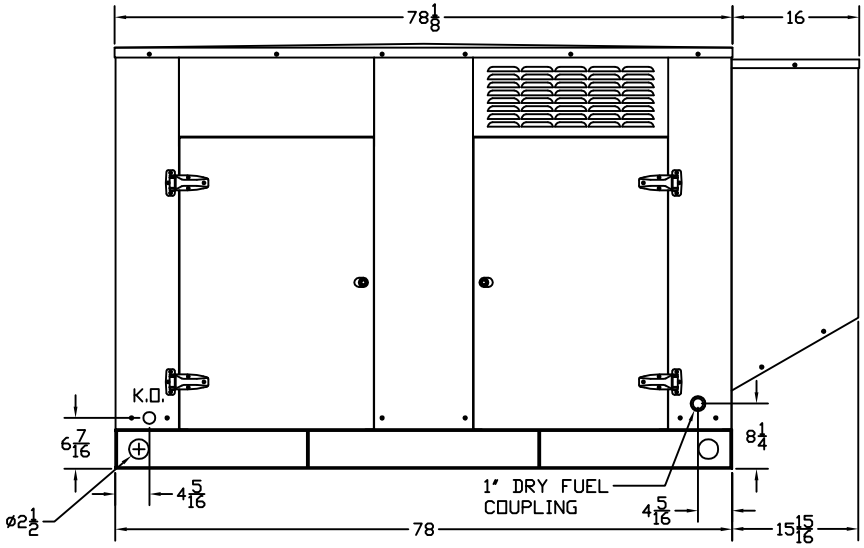

SIDE VIEW

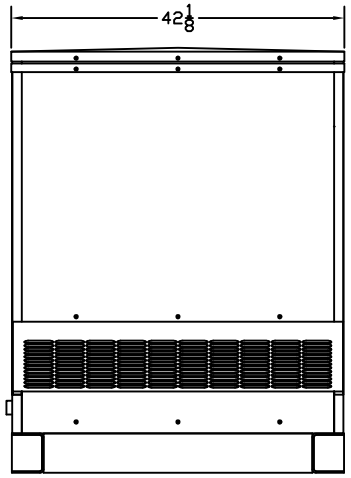

RADIATOR END VIEW

SP-SPJD-410-620-L2-GENERATOR-SET-HINGES-OVERVIEW-20170410