LEVEL 2 ENCLOSURE OUTLINE DIMENSIONS FOR PR-1800 & PR-2400

TOP VIEW

(GEN-SET HAS (6) DOORS, (3) SHOWN OPEN ARE TYPICAL FOR BOTH SIDES)

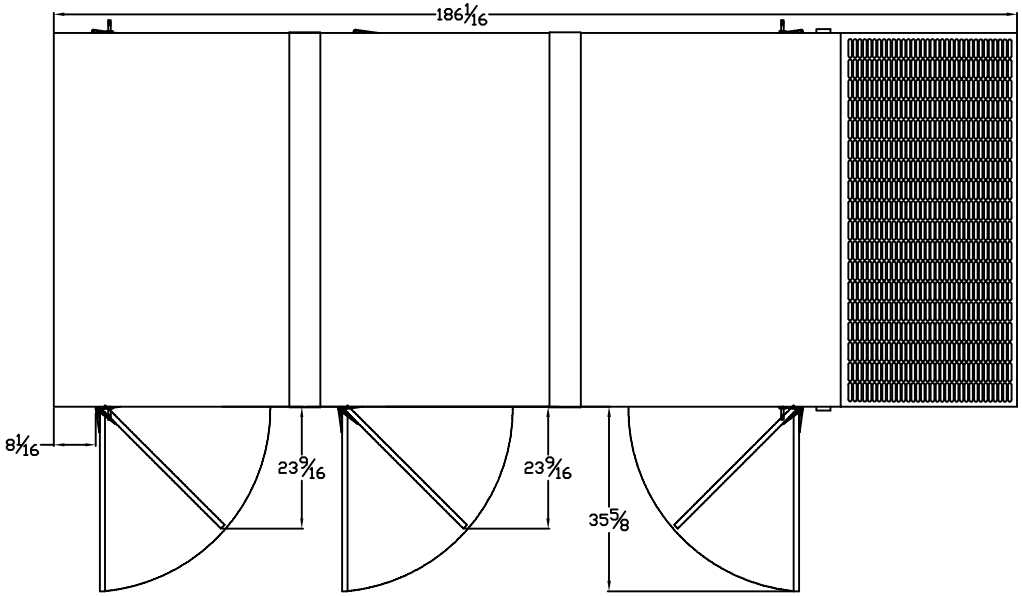

FRAME VIEW

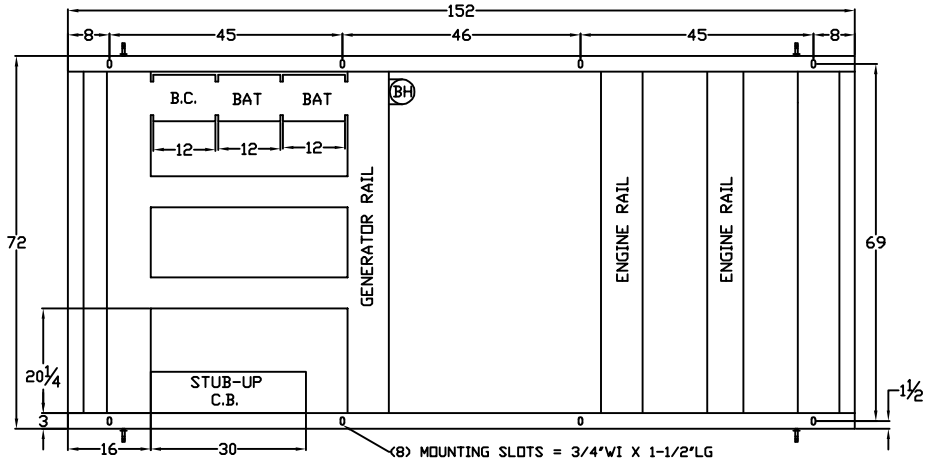

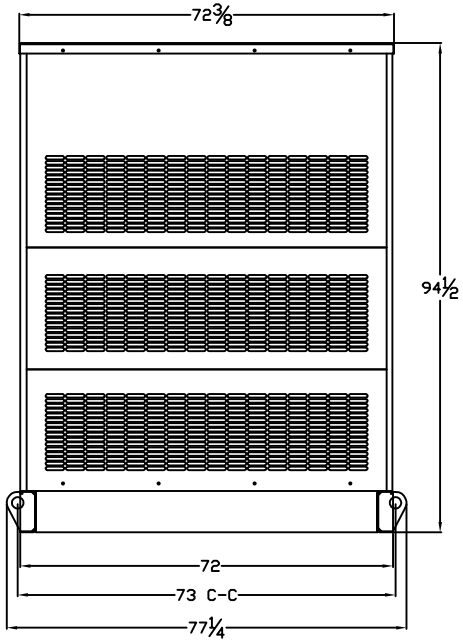

GENERATOR END VIEW

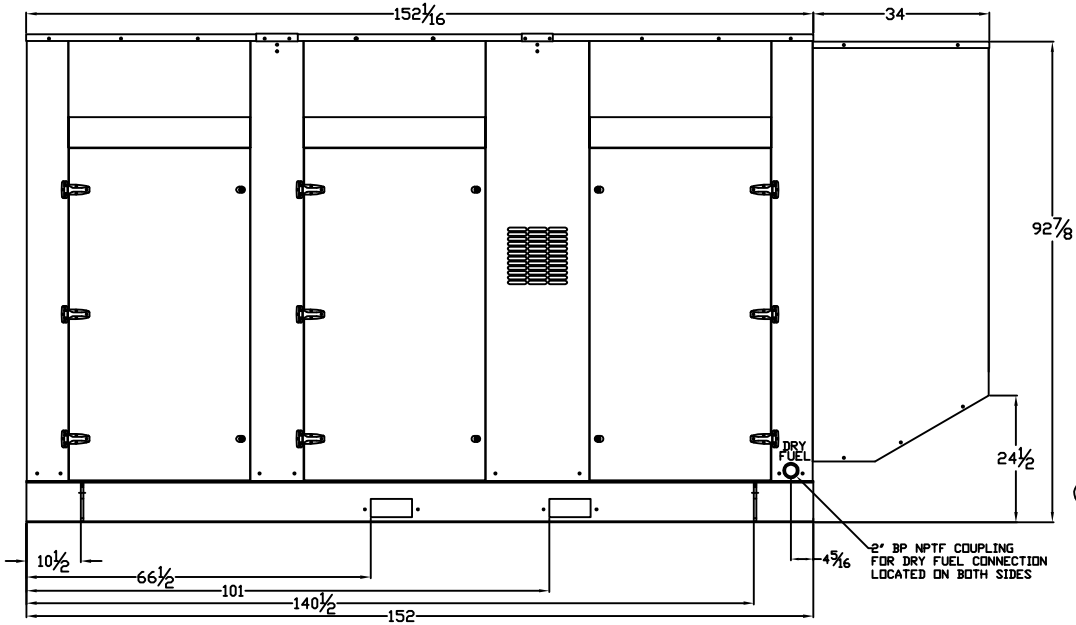

SIDE VIEW

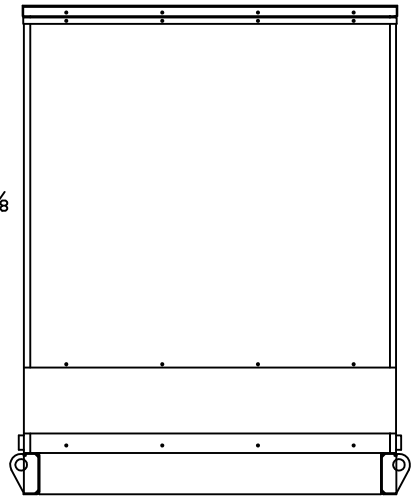

RADIATOR END VIEW

PR-1800-PR-2400-L2-GENERATOR-SET-HINGES-OVERVIEW-20180428