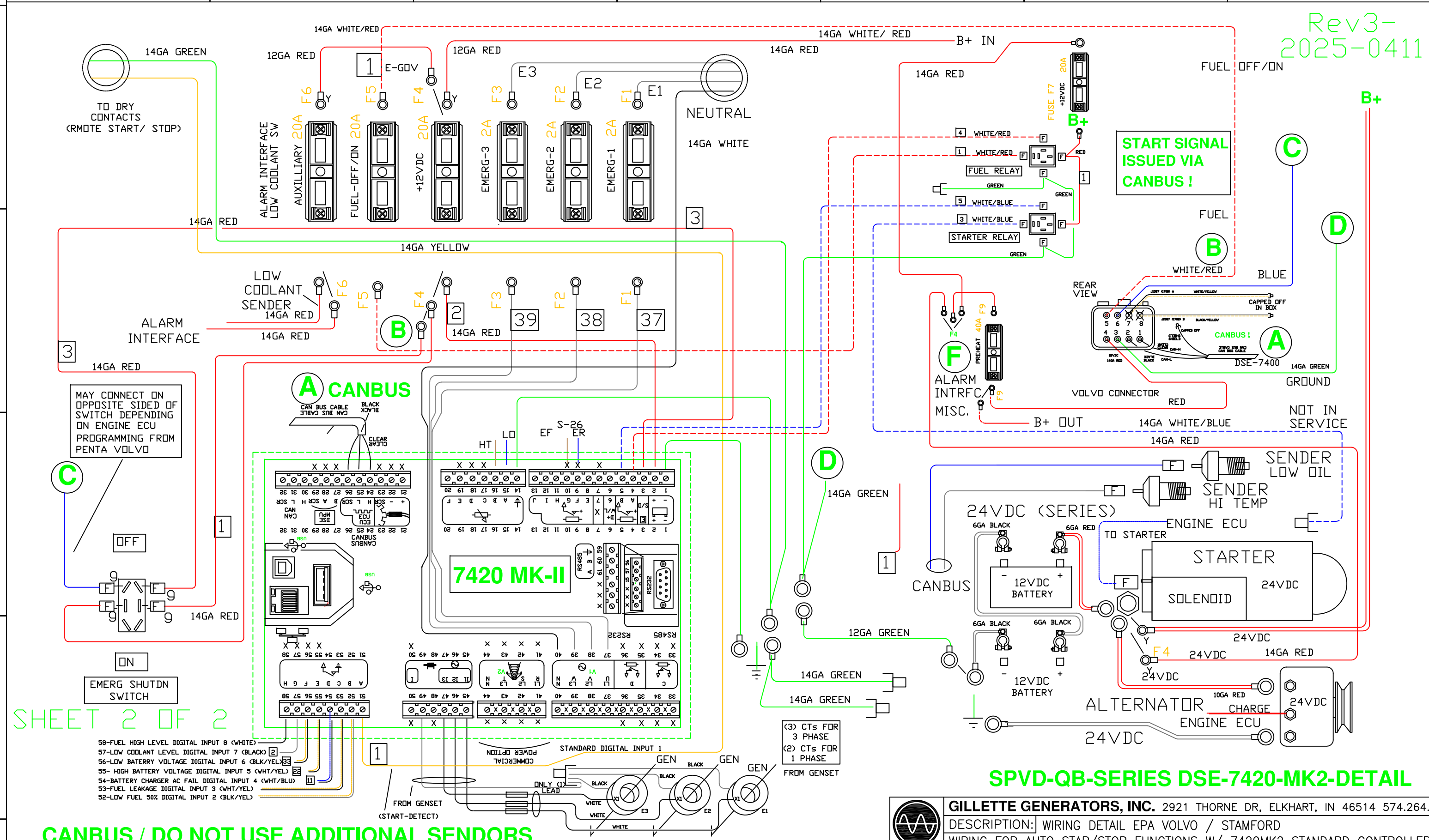

GILLETTE GENERATORS, INC. 2921 THORNE DR, ELKHART, IN 46514 574.264.9639

DESCRIPTION: WIRING DETAIL EPA VOLVO / STAMFORD
WIRING FOR AUTO STAR/STOP FUNCTIONS W/ 7420MK2 STANDARD CONTROLLER

REV 3

DATE: 6-7-2019	PT. NO:	SCALE: 1:1	CAD_NO.: 20240310.12:00:00
DR.BY: TEDD	ENG. TEDD	PG.NO. 1 OF 1	DRAWING NO.: VOLVO/-SPVD-/VOLVO